Miramar | Building Division
Community & Economic Development Department
2200 Civic Center Place | Miramar, Florida 33025
Tel: 954.602.3200 | Fax: 954.602.3635
www.miramarfl.gov

Fence Application Package

Who Can Apply (A or B)
A. Licensed Contractors for Residential Permit *can be issued to* ***Licensed Contractors*** *properly registered in the Community Development - Building Division. Contractors shall provide all required applications properly signed and notarized.* ***Also, Contract signed by both parties (Contractor & Homeowner) shall be provided indicating contract value per every applicable discipline.*** ***ATTENTION HOMEOWNER – READ CAREFULLY*** ***B. Homeowner/Builder for Residential Only.*** *Permit can be issued to homeowner/builder if* ***job address matches the address on picture ID (Driver License, ID card) and also matching the Proof of ownership (Recorded warranty deed, tax statement, settlement statement).*** *It means that Homeowner/Builder may apply if his/her address on picture ID match the job address for which he/she intends to apply for permit, also proof of ownership shall match the name and address on the picture ID. For Homeowner/builder all documents requiring notarization shall be notarized by a Building Permit Clerk.* **OUTSIDE NOTARIZATION WILL NOT BE ACCEPTED. HOMEOWNER/BUILDER SHALL BE PRESENT AT THE BUILDING DIVISION TO APPLY FOR PERMIT.** • ***If a contractor is hired, then the contractor must pull the permit.***
Required Documents
☐ *Permit application. Describing type & height of fence. For homeowner application, see the note (B) indicated above.* ☐ *Homeowner's Association Affidavit of Awareness (Included in this package). This affidavit is required even if the property is not located in a Homeowner's Association.* ☐ *Owner-Builder Disclosure Statement (This is required only If application is by homeowner).* ☐ *Full Scalable Boundary Survey (1 set), indicating location and dimensions of the fence. Reduced, faxed, enlarged survey or any altered survey is not acceptable.* ***The boundary surveys submitted for application purpose shall be updated with less than five (5) years, and it shall be original signed & sealed by the Professional Land Surveyor.*** ☐ *Approval from South Broward Drainage District is required if fence is encroaching lake easement.* ***SOUTH BROWARD DRAINAGE DISTRICT.*** *6591 S.W. 160th Ave. Southwest Ranches. Florida 33331* *Phone (954) 680-3337 • Fax (954) 680-3339.* ☐ *Notice of Commencement, if job value is more than $2,500 as per value in a contract signed by both parties (Contractor & Homeowner) or as determined by Building Official. Notice of commencement must be filed at the Broward County Government Center / Records Division 115 S. Andrews Ave. Fort Lauderdale, FL 33301.* ☐ *For Wood fence built pieces by pieces, the typical detail as per Florida Building Code can be used (See attached).* ☐ *For prefabricated wood fence panels, one(1) set of current Product Approvals (N.O.A.) are required. Product Approvals (N.O.A.) may be provided by supplier/retailer.* ☐ *For Vinyl or PVC Fences, one (1) set of current Product Approvals (N.O.A.) are required. In lieu of Product approvals, you can provide engineered details (1 set) for the fence signed & sealed by Professional Engineer (P.E.).* ☐ *For Aluminum, Precast and Reinforced Masonry fences, one (1) set of engineered detail and/or plans signed & sealed by Professional Engineer or Architect shall be provided along with the application forms.*
ATTENTION APPLICANT*: For Fence used as a pool barrier the following apply:* 1. *Neighboring fences may not be used as pool barrier. Planning & Zoning Division may require additional information about using neighboring fencing as a pool barrier. Contact Planning & Zoning at (954)602-3264. Email: pandz@miramarfl.gov* 2. *Other regulations may apply as per Florida Building Code- Residential Chapter 45 and City Land Development Code.*

Required Inspection	1. *For fences other than Precast & Reinforced Masonry fences: Final Inspection 999* 2. *For Precast & Reinforced masonry fences, inspections are based on the scope of work indicated in the approved sets of plans. For inspections, you may contact Building Division →(954)602-3200*

BROWARD COUNTY UNIFORM BUILDING PERMIT APPLICATION

Select Trade: ☐ **Building** ☐ **Electrical** ☐ **Plumbing** ☐ **Mechanical** ☐ **Other** _____

Application Number: Application Date:

1

Job Address:			Unit:	City:
Tax Folio No.:	Flood Zone:	BFE:	Floor Area:	Job Value:
Building Use:		Construction Type:		Occupancy Group:
Present Use:		Proposed Used:		
Description of Work:				
☐ New ☐ Addition ☐ Repair ☐ Alteration ☐ Demolition ☐ Revision ☐ Other:				
Legal Description:				☐ Attachment

2

Property Owner:	Phone:	Email:
Owner's Address:	City:	State: Zip:

3

Contracting Co.:	Phone:	Email:
Company Address:	City:	State: Zip:
Qualifier's Name:	Owner-Builder: ☐	License Number:

4

Architect/Engineer's Name:	Phone:	Email:
Architect/Engineer's Address:	City:	State: Zip:
Bonding Company:		
Bonding Company Address:	City:	State: Zip:
Fee Simple Titleholder's name (if other than owner):		
Fee Simple Titleholder's Address (If other than owner):	City:	State: Zip:
Mortgage Lender's Name:		
Mortgage Lender's Address:	City:	State: Zip:

Application is hereby made to obtain a permit to do the work and installations as indicated. I certify that no work or installation has commenced prior to the issuance of a permit and that all work will be performed to meet the standards of all laws regulating construction in this jurisdiction. I understand that a separate permit must be secured for ELECTRICAL WORK, PLUMBING, SIGNS, WELLS, POOLS, FURNACES, BOILERS, HEATERS, TANKS, and AIR CONDITIONERS, etc.

WARNING TO OWNER: YOUR FAILURE TO RECORD A NOTICE OF COMMENCEMENT MAY RESULT IN YOUR PAYING TWICE FOR IMPROVEMENTS TO YOUR PROPERTY. A NOTICE OF COMMENCEMENT MUST BE RECORDED AND POSTED ON THE JOB SITE BEFORE THE FIRST INSPECTION.IF YOU INTEND TO OBTAIN FINANCING, CONSULT WITH YOUR LENDER OR AN ATTORNEY BEFORE COMMENCING WORK OR RECORDING YOUR NOTICE OF COMMENCEMENT.

X_____
Signature of Property Owner or Agent

STATE OF FLORIDA
COUNTY OF _____

Sworn to (or affirmed) and subscribed before me this_____ day of _____, 20_____by

_____
(Type / Print Property Owner or Agent Name)

_____
NOTARY'S SIGNATURE as to Owner or Agent's Signature

Notary Name _____
(Print, Type or Stamp Notary's Name)

Personally Known _____or Produced Identification _____

Type of Identification Produced _____

X_____
Signature of Qualifier

STATE OF FLORIDA
COUNTY OF _____

Sworn to (or affirmed) and subscribed before me this_____ day of _____, 20_____by

_____
(Type / Print Qualifier's Name)

_____
NOTARY'S SIGNATURE as to Qualifier's Signature

Notary Name _____
(Print, Type or Stamp Notary's Name)

Personally Known _____or Produced Identification _____

Type of Identification Produced _____

APPROVED BY : _____ Permit Officer Issue Date: _____ Code in Effect: _____

A jurisdiction may use a supplemental page requesting additional information and citing other conditions, please inquire.

Note: If any development work as described in FS 380.04 Sec. 2 a-g is to be performed, a development permit must be obtained prior to the issuance of a building permit.

Miramar | Building Division
Community & Economic Development Department
2200 Civic Center Place | Miramar, Florida 33025
Tel: 954.602.3200 | Fax: 954.602.3635
www.miramarfl.gov

Owner/Builder Disclosure Statement

Owner Name: _____

Address: _____ Miramar, FL, Zip Code: _____

LOT:_____ BLOCK: _____ SUBDIVISION: _____

I am submitting an application for a Building Permit as an Owner-Builder in accordance with the exemption set forth in Florida Statute 489.103. Florida law requires construction to be done by a licensed contractor. It's a requirement by law you read and sign the following statements, and hence you can understand your responsibilities as an owner-builder. By signing the following statements, you attest that:

DISCLOSURE STATEMENT

(Read and Initial to the left of each statement)

— 1. I understand that state law requires construction to be done by a licensed contractor and have applied for an owner-builder permit under an exemption from the law. The exemption specifies that I, as the owner of the property listed, may act as my own contractor with certain restrictions even though I do not have a license.

— 2. I understand that building permits are not required to be signed by a property owner unless he or she is responsible for the construction and is not hiring a licensed contractor to assume responsibility.

— 3. I understand that, as an owner-builder, I am the responsible party of record on a permit. I understand that I may protect myself from potential financial risk by hiring a licensed contractor and having the permit filed in his or her name instead of my own name. I also understand that a contractor is required by law to be licensed in Florida and to list his or her license numbers on permits and contracts.

— 4. I understand that I may build or improve a one-family or two-family residence or a farm outbuilding. I may also build or improve a commercial building if the costs do not exceed $75,000. The building or residence must be for my own use or occupancy. It may not be built or substantially improved for sale or lease. If a building or residence that I have built or substantially improved myself is sold or leased within 1 year after the construction is complete, the law will presume that I built or substantially improved it for sale or lease, which violates the exemption.

— 5. I understand that, as the owner-builder, I must provide direct, onsite supervision of the construction.

— 6. I understand that I may not hire an unlicensed person to act as my contractor or to supervise persons working on my building or residence. It is my responsibility to ensure that the persons whom I employ have the licenses required by law and by county or municipal ordinance.

— 7. I understand that it is a frequent practice of unlicensed persons to have the property owner obtain an owner-builder permit that erroneously implies that the property owner is providing his or her own labor and materials. I, as an owner-builder, may be held liable and subjected to serious financial risk for any injuries sustained by an unlicensed person or his or her employees while working on my property. My homeowner's insurance may not provide coverage for those injuries. I am willfully acting as an owner-builder and am aware of the limits of my insurance coverage for injuries to workers on my property.

— 8. I understand that I may not delegate the responsibility for supervising work to a licensed contractor who is not licensed to perform the work being done. Any person working on my building who is not licensed must work under my direct supervision and must be employed by me, which means that I must comply with laws requiring the withholding of federal income tax and social security contributions under the Federal Insurance Contributions Act (FICA) and must provide workers' compensation for the employee. I understand that my failure to follow these laws may subject me to serious financial risk.

— 9. I agree that, as the party legally and financially responsible for this proposed construction activity, I will abide by all applicable laws and requirements that govern owner-builders as well as employers. I also understand that the construction must comply with all applicable laws, ordinances, building codes, and zoning regulations.

Miramar | Building Division
Community & Economic Development Department
2200 Civic Center Place | Miramar, Florida 33025
Tel: 954.602.3200 | Fax: 954.602.3635
www.miramarfl.gov

Owner/Builder Disclosure Statement

(Continuation)

— 10. I understand that I may obtain more information regarding my obligations as an employer from the Internal Revenue Service, the United States Small Business Administration, the Florida Department of Financial Services, and the Florida Department of Revenue. I also understand that I may contact the Florida Construction Industry Licensing Board at (telephone number) or (Internet website address) for more information about licensed contractors.

— 11. I am aware of, and consent to, an owner-builder building permit applied for in my name and understand that I am the party legally and financially responsible for the proposed construction activity at the address listed above.

— 12. I agree to notify (issuer of disclosure statements) immediately of any additions, deletions, or changes to any of the information that I have provided on this disclosure.

Licensed contractors are regulated by laws designed to protect the public. If you contract with a person who does not have a license, the Construction Industry Licensing Board and Department of Business and Professional Regulation may be unable to assist you with any financial loss that you sustain as a result of a complaint. Your only remedy against an unlicensed contractor may be in civil court. It is also important for you to understand that, if an unlicensed contractor or employee of an individual or firm is injured while working on your property, you may be held liable for damages. If you obtain an owner-builder permit and wish to hire a licensed contractor, you will be responsible for verifying whether the contractor is properly licensed and the status of the contractor's workers' compensation coverage.

Before a building permit can be issued, this disclosure statement must be completed and signed by the property owner and returned to the local permitting agency responsible for issuing the permit. A copy of the property owner's driver license, the notarized signature of the property owner, or other type of verification acceptable to the local permitting agency is required when the permit is issued.

I have read the foregoing instructions and I am aware of my responsibilities.

_____ _____

Owner Signature *Date Signed*

STATE OF FLORIDA, COUNTY OF BROWARD. Sworn to and subscribed before me this _____day of _____, 20_____.

_____
Notary Public

F.S 489.103. 3(c). If any person violates the requirements of this subsection, the local permitting agency shall withhold final approval, revoke the permit, or pursue any action or remedy for unlicensed activity against the owner and any person performing work that requires licensure under the permit issued.

Miramar | Building Division
Community & Economic Development Department
2200 Civic Center Place | Miramar, Florida 33025
Tel: 954.602.3200 | Fax: 954.602.3635
www.miramarfl.gov

Affidavit of Awareness of Homeowner's Association Regulations

The following "Affidavit" is required as per City's ordinance. This is a mandatory affidavit which is required even if your property is not located in a Homeowner's Association.

ATTENTION APPLICANT. READ CAREFULLY

- For homeowner/Builder applicants, this affidavit shall be notarized by Permit Clerk at the Building Division. Homeowner shall appear in person with required picture I.D. (i.e. Driver License) and proof of ownership (i.e. Recorded Warranty, County Tax Statement). The physical address on I.D. shall match the address on the proof of ownership (i.e. Recorded Warranty Deed).
- For Licensed Contractor applicants, this affidavit can be notarized outside the Building Division by any Notary Public.

Homeowner or Condominium Association Affidavit requirement. **Miramar - City Code Sec. 22-29.(c)(1)** As part of the application process for a building permit in accordance with this chapter and with Section 713.20 of the Land Development Code, each applicant shall sign an affidavit (the "affidavit of awareness") indicating that the applicant is aware that, if the subject property is located in a Homeowners' Association or Condominium Association, as defined in this section, the applicant's property may be subject to additional regulations despite the issuance of a building permit by the city.

This serves to notify such homeowner that the issuance of a Building, Landscaping, or other permits by the City of Miramar, Florida does not exempt he/she from any and all other regulations imposed by the Homeowner's Association (HOA) in which his/her property is located. Be aware that despite the issuance of a building permit by the city, the applicant's property may result in additional regulations or denial to perform the work in your property located at HOA community**.**

Read and Initial to the left of the applicable statement

_____I acknowledge that **I am the owner of property** located in the following Homeowner's Association:

_____
Print Name of Homeowner's Association

_____I acknowledge that my property is not located in a Homeowners' Association.

Name: _____
Homeowner - Print Name

Job Address: _____

Miramar, Florida Zip Code : _____

Signature:_____
Homeowner - Signature

STATE OF FLORIDA. Sworn to and subscribed before me this _____day of _____, 20_____

_____
Notary Public

WOOD FENCE REQUIREMENTS AS PER FBC 2014

Land Development Code Sec. 22-141. (c): *The safety barrier shall be erected either around the swimming pool or around the premises on which the swimming pool is erected; in either event, it shall enclose the area entirely, prohibiting unrestrained admittance to the enclosed area.*

FBC 2014 Section 2328: HIGH VELOCITY HURRICANE ZONES: WOOD FENCES

2328.1 *Wood fences, so located on a property that by zoning regulations they cannot be used as a wall of a building, shall be constructed to meet the minimum specifications in 2328.2 and 2328.3.*

2328.2 *Fences not exceeding 6 feet (1829 mm) in height, shall be constructed to meet the following minimum requirements from nominal 4 X 4 X 8 posts No. 2 grade or better spaced 4 feet (1219mm) on center, and embedded 2 feet (610 mm) into a concrete footing 10 inches (254 mm) in diameter and 2 feet (610 mm) deep.*

2328.3 *Fences not exceeding 5 feet (1524 mm) or 4 feet (1219 mm) in height shall constructed as provided in 2328.2 except that the spacing of posts may be increased to 5 feet (1524 mm) and 6 feet (1829 mm) on center for those heights respectively.*

Wood fences not exceeding 6'-0" in height may be constructed to meet the following minimum requirements:

(1) *Vertical post of nominal 4x4 spaced a maximum of 4' o/c for 6' high fences; 5' o/c for 5' high fences, 6' o/c for 4' high fence.*
(2) *Post shall be embedded 2'0" into concrete footing 10" in diameter and 2'0" deep.*
(3) *2x4 material shall be fastened according to Chapter 23 with (2) #16D galv. nails at each attachment.*
(4) *All lumber shall be a minimum of #2 grade or better.*
(5) *All fasteners shall be corrosion resistant.*
(6) *Fence boards less than 8" wide shall be fastened with (2) #8 D galv. nails at each connection point.*

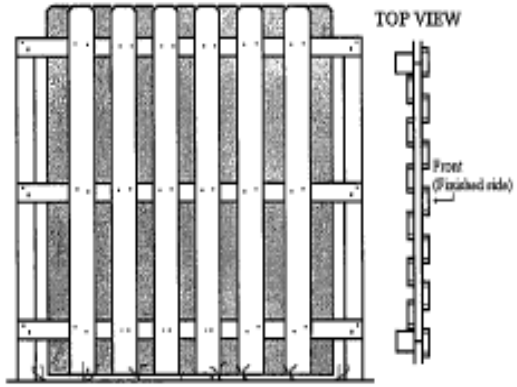

SHADOW BOX

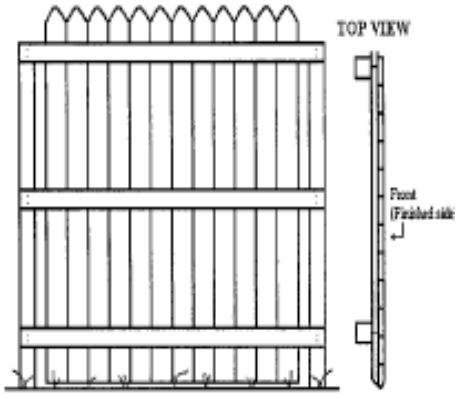

STOCKADE

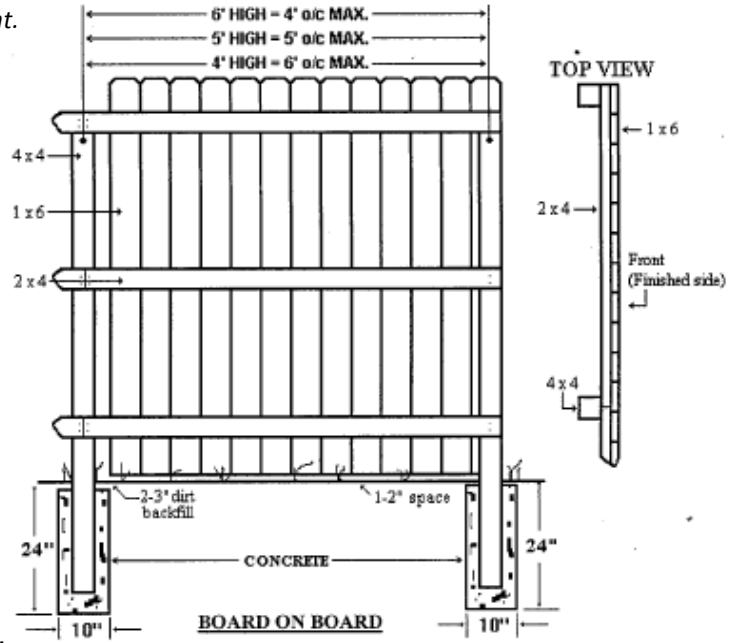

BOARD ON BOARD

FOR FENCE USED AS POOL BARRIER, THE FOLLOWING CODE SECTIONS SHALL BE TAKEN INTO CONSIDERATION:

FBC 454.2.17.1.5. *Where the barrier is composed of horizontal and vertical members and the distance between the tops of the horizontal members is 45 inches (1143 mm) or more, spacing between vertical members shall not exceed 4 inches (102 mm). Where there are decorative cutouts within vertical members, spacing within the cuts shall not exceed 1¾ inches (44 mm) in width.*

FBC 454.2.17.1.8 *Access gates, when provided, shall be self-closing and shall comply with the requirements of Sections* ***454.2.17.1.1*** *through* ***454.2.17.1.7*** *and shall be equipped with a self-latching locking device located on the pool side of the gate. Where the device release is located no less than 54 inches (1372 mm) from the bottom of the gate, the device release mechanism may be located on either side of the gate and so placed that it cannot be reached by a young child over the top or through any opening or gap from the outside. Gates that provide access to the swimming pool must open outward away from the pool. The gates and barrier shall have no opening greater than ½ inch (12.7 mm) within 18 inches (457 mm) of the release mechanism.*

SECTION 2224 HIGH-VELOCITY HURRICANE ZONES- CHAIN LINK FENCES

ATTENTION APPLICANT: *For Fence used as a pool barrier the following apply: Maximum mesh size for chain link fences shall be a $2^1/_4$ inch square (57 mm) unless the fence is provided with slats fastened at the top or bottom which reduce the openings to no more than $1^3/_4$ inches (44 mm).* ***FBC 454.2.17.1.6***

TABLE 2224 CHAIN LINK FENCE MINIMUM REQUIREMENTS

Fence Height (ft)	Terminal Post Dimensions (in inches) (o.d. x wall thickness)	Line Post Dimensions (o.d. x wall thickness) (in inches)	Terminal Post Concrete Foundation Size (diameter x depth) (in inches)	Line Post Concrete Foundation Size (diameter x depth) (in inches)
Up to 4	$2^3/_8 \times 0.042$	$1^5/_8 \times 0.047$	10 × 24	8 × 24
Over 4 to 5	$2^3/_8 \times 0.042$	$1^7/_8 \times 0.055$	10 × 24	8 × 24
Over 5 to 6(*)	**$2^3/_8 \times 0.042$**	**$1^7/_8 \times 0.065$**	**10 × 24**	**8 × 24**
Over 6 to 8	$2^3/_8 \times 0.110$	$2^3/_8 \times 0.095$	10 × 36	10 × 36
Over 8 to 10	$2^7/_8 \times 0.110$	$2^3/_8 \times 0.130$	12 × 40	10 × 40
Over 10 to 12	$2^7/_8 \times 0.160$	$2^7/_8 \times 0.120$	12 × 42	12 × 42

For SI: 1 inch = 25.4 mm. ***(*)As per Miramar Land Development Code, For Residential Fence → Maximum Height = 6'-0"***

NOTES:

1. *This table is applicable only to fences with unrestricted airflow.*
2. *Fabric: $12^1/_2$ gauge minimum.*
3. *Tension bands: Use one less than the height of the fence in feet evenly spaced.*
4. *Fabric ties: Must be minimum the same gauge of the fabric.*
5. *Fabric tie spacing on the top rail: Five ties between posts, evenly spaced.*
6. *Fabric tie spacing on line posts: One less than height of the fence in feet, evenly spaced.*
7. *Either top rail or top tension wire shall be used.*
8. *Braces must be used at terminal posts if top tension wire is used instead of top rail.*
9. *Post spacing: 10 foot (3 m) on center maximum.*
10. *Posts shall be embedded to within 6 inches (152 mm) from the bottom of the foundation.*
11. *In order to follow the contour of the land, the bottom of the fence may clear the contour of the ground by up to 5 inches (127 mm) without increasing table values to the next higher limit.*

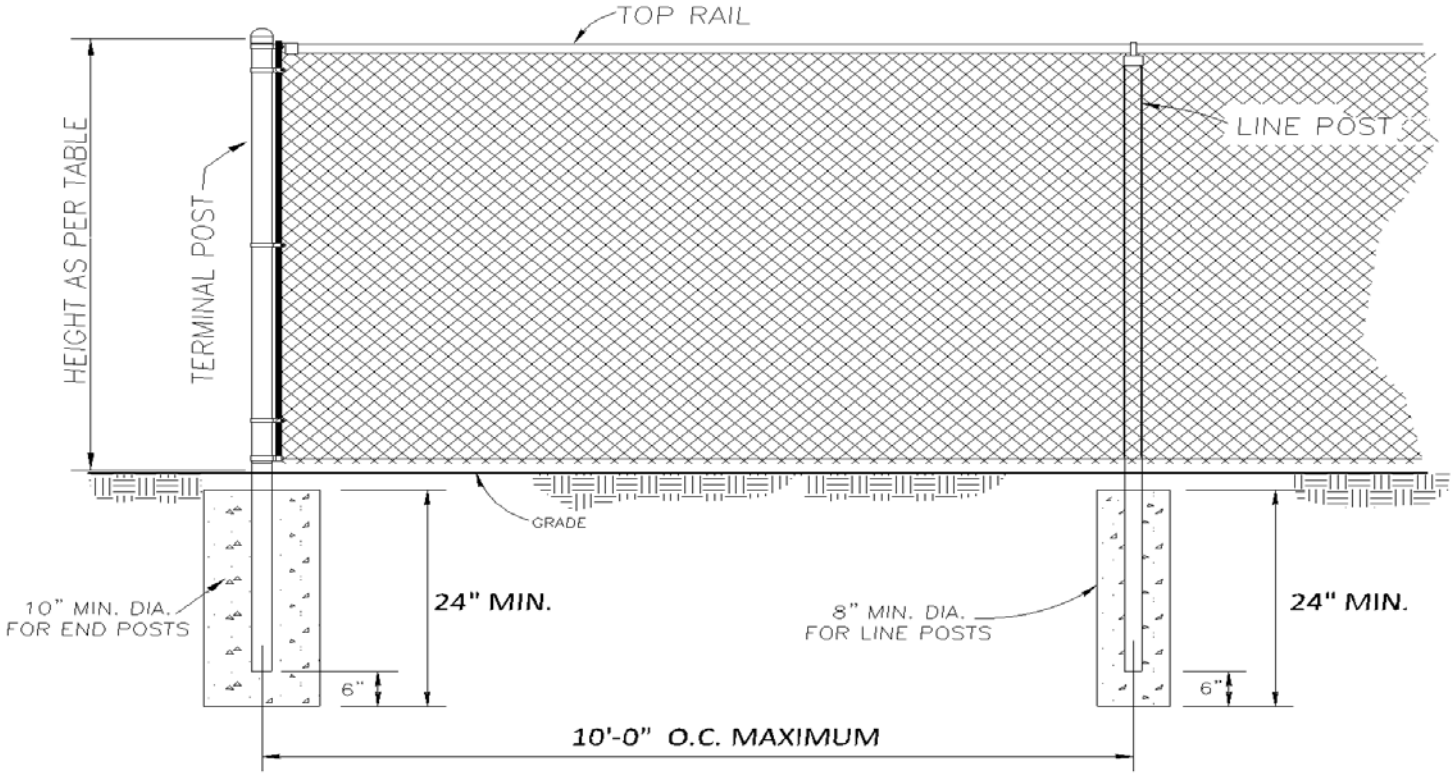

CHAIN LINK FENCE DETAIL

NOT TO SCALE.

AFTER RECORDING – RETURN TO:

PERMIT NUMBER:

NOTICE OF COMMENCEMENT

The undersigned hereby given notice that improvement will be made to certain real property, and in accordance with Chapter 713, Florida Statues the following information is provided in the Notice of Commencement.

1. **DESCRIPTION OF PROPERTY** (Legal description & street address, if available) **TAX FOLIO NO.:** _____

SUBDIVISION _____**BLOCK**_____**TRACT**_____**LOT**_____**BLDG**_____**UNIT**_____

_____

2. **GENERAL DESCRIPTION OF IMPROVEMENT:**

_____

3. **OWNER INFORMATION**: a. Name_____

b. Address_____ c. Interest in property_____

d. Name and address of fee simple titleholder (if other than Owner) _____

4. **CONTRACTOR'S NAME, ADDRESS AND PHONE NUMBER:**

_____

_____

5. **SURETY'S NAME, ADDRESS AND PHONE NUMBER AND BOND AMOUNT:**

_____

6. **LENDER'S NAME, ADDRESS AND PHONE NUMBER:**

_____

7. Persons within the State of Florida designated by Owner upon whom notices or other documents may be served as provided by Section 713.13 (1) (a) 7., Florida Statutes:
NAME, ADDRESS AND PHONE NUMBER:

_____

8. In addition to himself or herself, Owner designates the following to receive a copy of the Lienor's Notice as provided in Section 713.13 (1) (b), Florida Statutes:
NAME, ADDRESS AND PHONE NUMBER:

_____

9. Expiration date of notice of commencement (the expiration date is 1 year from the date of recording unless a different date is specified):_____ _____, 20____

WARNING TO OWNER: ANY PAYMENTS MADE BY THE OWNER AFTER THE EXPIRATION OF THE NOTICE OF COMMENCEMENT ARE CONSIDERED IMPROPER PAYMENTS UNDER CHAPTER 713, PART I, SECTION 713.13, FLORIDA STATUTES, AND CAN RESULT IN YOUR PAYING TWICE FOR IMPROVEMENTS TO YOUR PROPERTY. A NOTICE OF COMMENCEMENT MUST BE RECORDED AND POSTED ON THE JOB SITE BEFORE THE FIRST INSPECTION. IF YOU INTEND TO OBTAIN FINANCING, CONSULT WITH YOUR LENDER OR AN ATTORNEY BEFORE COMMENCING WORK OR RECORDING YOUR NOTICE OF COMMENCEMENT.

_____ _____

Signature of Owner or
Owner's Authorized Officer/Director/Partner/Manager

Print Name and Provide Signatory's Title/Office

State of Florida
County of Broward

The foregoing instrument was acknowledged before me this _____ day of _____, 20_____

By _____, as _____
(name of person) (type of authority,…e.g. officer, trustee, attorney in fact)
For _____.
(name of party on behalf of whom instrument was executed)

_____ Personally known or _____ produced the following type of identification: _____

Notary

_____
(Signature of Notary Public)

Under Penalties of perjury, I declare that I have read the foregoing and that the facts in it are true to the best of my knowledge and belief (Section 92.525, Florida Statutes).

Signature(s) of Owner(s) or Owner(s)' Authorized Officer/ Director / Partner/Manager who signed above:

By _____ By _____